ANALOG DIALOGUE

A JOURNAL FOR THE EXCHANGE OF OPERATIONAL AMPLIFIER TECHNOLOGY

▶ VOLUME 1 — NUMBER 3 Published by Analog Devices, Inc., Cambridge, Massachusetts SEPTEMBER, 1967

User's Guide to Applying and Measuring Operational Amplifier Specifications

By Ray Stata

Editor's Note;

This article is the result of many requests for a definitive article discussing the definitions and testing of op-amps. Keep on sending in your requests . . . we will try to fulfill them.

SINCE THERE ARE NO established standards for operational amplifier specifications we shall discuss here the terms used by Analog Devices to define operational amplifier characteristics as well as the limitations which must be observed in applying the published data to actual circuits. Wherever possible we show the test circuits used to measure these parameters. Although these test circuits are applicable to a wide range of operational amplifiers, special amplifiers such as FET, chopper stabilized or ultra fast response amplifiers may require changes in the recommended circuit values or in some cases different test methods to measure their specifications. As a general rule the power supply for these measurements should have line and load regulation of about 0.1% and ripple should be no more than a few millivolts.

Figure 1 gives a simplified equivalent circuit for an operational amplifier showing many of the sources of error which are discussed in the text The specifications should be referenced to this diagram to predict their effect in a closed loop circuit. For a single ended amplifier you would assume that the plus or non-inverting input is grounded.

OPEN LOOP GAIN

Open loop gain, A, is defined as the ratio of output voltage to error voltage e_ε between inputs as shown in figure 1. Gain is usually specified only at DC (A_o), but in many applications such as AC amplifiers the frequency dependence of gain is also important. For this reason the typical open loop gain response is published for each amplifier. The open loop gain response of most amplifiers can be approximated by figure 2.

ALSO IN THIS ISSUE

- *New Varactor Bridge Op-Amps*
- *Model 141 Economy FET Op-Amp*
- *F.E.T. Stabilizes Amplitude of Wien Bridge Oscillator*
- *Grounded-load Current Source Uses One Op-Amp*
- *Measuring the Pinch-Off Voltage of F.E.T.'s*
- *Worth Reading*

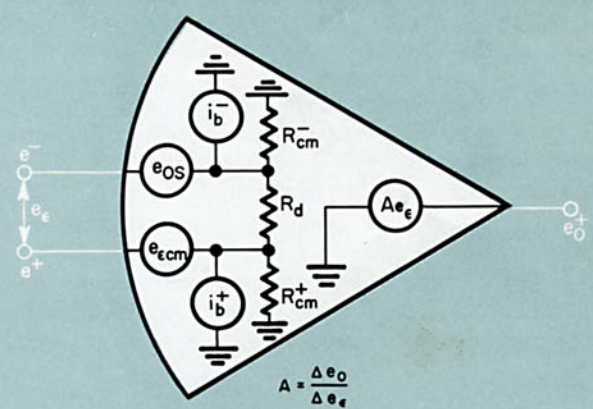

$$A = \frac{\Delta e_o}{\Delta e_\varepsilon}$$

$$e_{\varepsilon cm} = e^+/CMR$$

$$e_\varepsilon = e^- - e^+$$

$$e_{os} = E_{os} + \left(\frac{\Delta e_{os}}{\Delta T}\right)\Delta T + \left(\frac{\Delta e_{os}}{\Delta V_s}\right)\Delta V_s + \left(\frac{\Delta e_{os}}{\Delta t}\right)\Delta t$$

$\downarrow$ μV@ 25°C $\downarrow$ μV/°C $\downarrow$ μV/% $\downarrow$ μV/DAY

$$i_b = I_b + \left(\frac{\Delta i_b}{\Delta T}\right)\Delta T + \left(\frac{\Delta i_b}{\Delta V_s}\right)\Delta V_s + \left(\frac{\Delta i_b}{\Delta t}\right)\Delta t$$

$\downarrow$ nA @ 25°C $\downarrow$ nA/°C $\downarrow$ nA/% $\downarrow$ nA/DAY

FIGURE 1. OPERATIONAL AMPLIFIER EQUIVALENT CIRCUIT

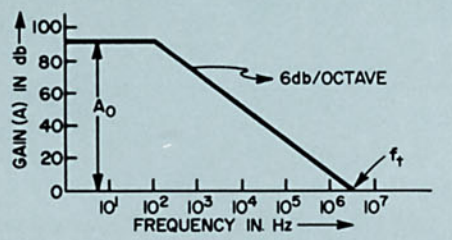

FIGURE 2. TYPICAL OPEN LOOP GAIN RESPONSE

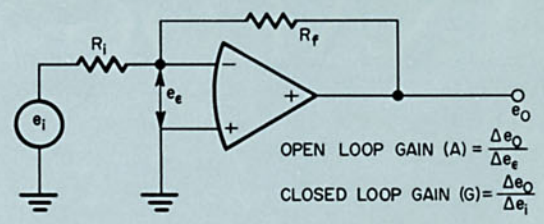

FIGURE 4. CLOSED LOOP CIRCUIT

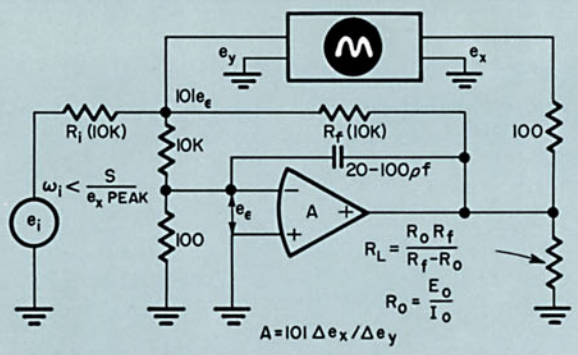

FIGURE 3. OPEN LOOP GAIN TEST CIRCUIT

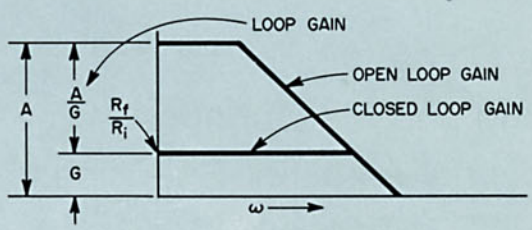

FIGURE 5. DETERMINATION OF LOOP GAIN

Open loop gain changes with load impedance (R_L), ambient temperature and supply voltage. As a rule, open loop gain will not change more than a factor of 10 between rated load and no load conditions. Most operational amplifiers have a positive gain temperature coefficient of about 0.5 to 1%/°C and gain changes with supply voltage at about 2%/%. Analog Devices specifies all open loop gains at rated load, 25°C and rated supply voltages.

A practical circuit for measuring open loop gain over a range of frequencies is shown in figure 3. The voltage divider on the negative input boosts the sensitivity of the error voltage by 100 times which makes it possible to measure gains up to one million. At low frequencies open loop gain is constant so that DC gain can be measured by a low frequency signal (about 5Hz). The voltage divider may not be necessary for low gain amplifiers (below 20,000) and it is not recommended for measuring gain at high frequencies where open loop gain is less.

At very best, noise pick up is a problem for measuring high gains and care must be taken to adequately shield the test circuit. At high frequencies the amplitude of the output voltage must be reduced to avoid exceeding the slewing rate of the amplifier. For this reason the output voltage should be adjusted, so that e_x(peak) < slew rate/ω_i, where ω_i is the test frequency.

SIGNIFICANCE OF OPEN LOOP GAIN

Operational amplifiers are rarely used open loop. Instead negative feedback is used around the amplifier to improve the accuracy of the circuit. This introduces a second term, closed loop gain (G), which is defined as the gain of the circuit with feedback. The simple inverting amplifier in Figure 4 illustrates this point.

Linearity, gain stability, output impedance and gain accuracy are all improved by the amount of feedback. Figure 5 graphically illustrates the relation between open loop gain and closed loop gain.

The excess of open loop gain over closed loop gain is called loop gain. (Subtraction of dB is equivalent to arithmetic division.) The improvement of open loop performance due to feedback is directly proportional to loop gain. As a general rule for moderate accuracy, open loop gain should be 100 times greater than the closed loop gain at the frequency, or frequencies, of interest (that is loop gain = 100). For higher accuracy, loop gain should be 1000 or more. To illustrate, we recall that open loop gain stability for most operational amplifiers is about 1%/°C. With loop gain of 100, closed loop gain stability would be 100 times better or 0.01%/°C. Likewise, closed loop output impedance would be 100 times less than open loop output impedance with a loop gain of 100.

RATED OUTPUT VOLTAGE AND CURRENT

Rated output voltage, E_o, is the maximum peak output voltage which can be obtained at rated output current before clipping or excessive non-linearity occurs. This measurement is made at rated power supply voltage; at other supply voltages the output will swing to within about 4 volts of the supply voltage. Also the output voltage swing will increase somewhat at lower load current. Rated output current, I_o, is the minimum guaranteed value of current at the rated output voltage. Load impedance less than E_o/I_o can be used but E_o will decrease, distortion may increase and open loop gain will be reduced. Driving large capacitance loads at high frequencies will present a low load impedance which may then exceed the rated output current. Any convenient circuit such as figure 3 or figure 6 can be used to measure E_o and I_o.

UNITY GAIN SMALL SIGNAL RESPONSE

Unity gain small signal response, f_t, is the frequency at which the open loop gain becomes unity or zero dB (see figure 2). "Small signal" indicates that in general it is not possible to obtain large output voltage swing at high frequencies because of distortion due to slew rate limiting. Therefore in both measuring f_t and using the amplifier at high frequencies, the output voltage swing must be restricted to avoid slew rate limiting. This implies that the peak output voltage, e_o, for a sinusoidal signal at the unity gain frequency, f_t, must be less than $S/2\pi f_t$, where S is the slew rate.

For amplifiers with symmetrical response on each input, f_t may be measured by either the inverting circuit of figure 6 or the non-inverting circuit of the figure 7. Some units such as chopper stabilized amplifiers or wideband amplifiers with feed forward design have fast response only on the negative input which restricts testing and use to the inverting circuit. Remember that the closed loop unity gain response of figure 6 will be about one half the open loop unity gain response due to the loading of the feedback network. Moreover, large values of feedback resistance when coupled with stray capacitance may reduce the closed loop response and therefore the smallest possible value of R_f should be used, the limit being set by output current capability I_o.

Sometimes f_t is called unity gain-bandwidth product which implies that open loop gain at other frequencies can be predicted from this number. However, gain bandwidth product is constant only for amplifiers with 6dB/octave roll off! For fast roll off amplifiers, gain bandwidth product increases with gain and thus we publish the open loop response curve to give typical gain at each frequency.

FULL POWER RESPONSE

The large signal and small signal response characteristics of operational amplifiers differ substantially due to dynamic nonlinearities or transient saturation. An amplifier will not respond to large signal changes as fast as the small signal bandwidth characteristics would predict. The most prominent contributor to large signal response limitations is slew rate limiting in the output stages. Circuit and transistor capacitances can be charged and discharged only so fast due to the limited dynamic range of the driving circuits. Transient saturation can also occur in the input stages of the amplifier due to overloading the input stage or due to common mode voltage slew rate limiting, but this is rarely a problem as compared to saturation of the output stages.

Full power response, f_p, is the maximum frequency measured at unity closed loop gain, for which rated output voltage, $\pm E_o$, can be obtained for a sinusoidal signal at rated load without distortion due to slew rate limiting. Note that this specification does not relate to "response" in the sense of gain reduction with frequency. Instead it refers only to distortion in the output signal caused by slew rate limiting. For a sinusoidal signal, the maximum slope or rate of voltage change occurs at zero crossing and is proportional to the peak amplitude and the frequency.

Thus we see that to a first approximation slew rate, S, and full power response, f_p, are related by equation 1.

$$\left.\frac{de_o}{dt}\right|_{max} = 2\pi f_p E_o = S \qquad \text{(equation 1)}$$

As the voltage swing is reduced below rated output, E_o, the operating frequency can be proportionally increased without exceeding the slew rate, S. In the limit the operating frequency approaches the unity gain bandwidth, f_t, and the corresponding voltage signal defines the maximum peak amplitude for "small signal" unity gain response. The circuits of figure 6 or figure 7 can be used to measure full power response depending on whether inverting or non-inverting parameters are measured. Where dynamic saturation of the output stages is the primary cause for slew rate limiting either test circuit will give equivalent results. For very fast response amplifiers, load capacitance and/or capacitance from the output to the negative input will cause apparent slew rate limiting and consequent degradation of full power response. This is due to saturation of amplifier output current in charging these capacitances and therefore such capacitances must be low.

Output distortion can be measured either by a distortion meter on the output or by observing a Lissajon pattern on an oscilloscope. There is no industry wide accepted value for the distortion level which determines the full power response limitation, but a number like 1% to 3% is a reasonable figure. One subtle point here is that closed loop output distortion depends on the amount of feedback or loop gain and therefore it depends on the closed loop gain of the measurement. Full power response is generally measured at unity gain where loop gain is the highest. At higher closed loop gains output distortion will increase for the same full power response frequency.

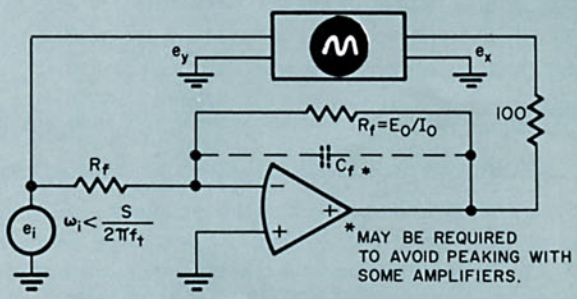

FIGURE 6. INVERTING CIRCUIT FOR MEASURING f_t, f_p, S, T

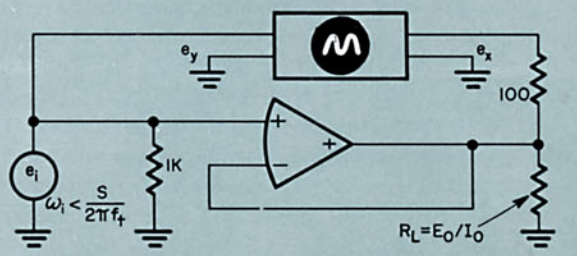

FIGURE 7. NONINVERTING CIRCUIT FOR MEASURING f_t, f_p, S, T, E_{cm}

In many applications the additional distortion which is caused by exceeding the full power response can be comfortably ignored. However, a far more serious effect, often overlooked, is that a DC offset voltage can be generated when the full power response is exceeded due to rectification of the unsymmetrical feedback waveform or due to overloading the input stage with large distortion signals at the summing junction.

These more subtle points in measuring full power response as well as the attendant side effects suggest the circuit of figure 8 as more satisfactory test circuit. By viewing the error voltage at the summing junction on an oscilloscope, distortion signals are more easily detected, signal generator distortion is eliminated from the measurement and frequency dependent DC offset can be readily observed.

SLEWING RATE

The origins of slewing rate limitations were discussed in the previous section. Slewing rate, S, usually expressed in volts/μsec defines the maximum rate of change of output voltage for a large step change.

Equation 1 suggests a convenient method to measure slewing rate by first measuring full power response, f_p, and then calculating S. Although this test method yields usable results for most amplifiers in most applications, the relationship of equation 1 does not apply under all conditions. First, slewing rate is a non-linear function of output voltage and equation 1 measures slewing rate only at zero volts output. This second order effect can usually be safely ignored in most applications. However, for certain amplifiers, particularly fast response types, the slew rate may be higher than that predictable from f_p. In these cases f_p is limited by factors other than slew rate such as DC offset errors which are generated by the rectification of large high frequency error voltages.

A more direct method to measure slewing rate is to apply low frequency square waves (about 100Hz) to the input of figure 6 or figure 7 which cause full voltage swing at the output and to observe the rise time from 10 to 90% on an oscilloscope (see figure 9). Small feedback resistors must be used to avoid degradation of slewing rate due to stray capacitance.

In applying operational amplifiers remember that repetitive input waveforms whose rise time exceeds the amplifier's slewing rate will generate voltage spikes at the summing junction. These spikes are usually unsymmetrical and are also usually clipped unsymmetrically by the input circuit of the amplifier — either or both of which effects will cause DC offsets at the output.

OVERLOAD RECOVERY

Overload recovery, τ, defines the time required for the output voltage to recover to the rated output voltage E_o from a saturated condition. For this test the circuit of figure 6 or 7 is used with an input square wave adjusted to be 50% greater than the voltage required to saturate the amplifier output. The square wave frequency should be adjusted to about 100Hz and the input-output signals should be compared on a dual trace oscilloscope as illustrated in figure 9.

In some amplifiers the overload recovery will increase for large impedances (greater than 50KΩ) in the input circuit, either the summing impedance for figure 6 or the source input for figure 7. Published specifications apply for low impedances and assume that overload recovery is not degraded by stray capacitance in the feedback network.

Normally, overloaded recovery time runs about one millisecond. For the inverting configuration an external clamp circuit can be added to improve overload recovery as illustrated in figure 10. This circuit prevents the output from saturating and therefore circumvents any delays due to overload recovery. The only constraint for proper operation is that input current (e_i/R_i) shall be approximately less than the rated output current I_o minus the load current. The clamp circuit cannot be used with the non-inverting and differential configurations.

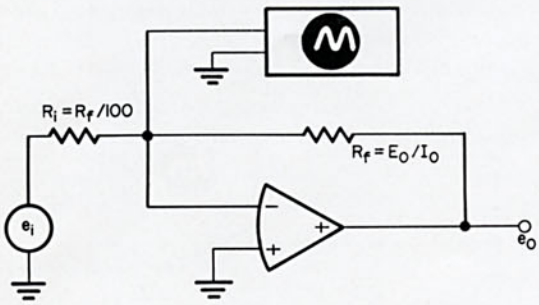

FIGURE 8. MEASURING FULL POWER RESPONSE

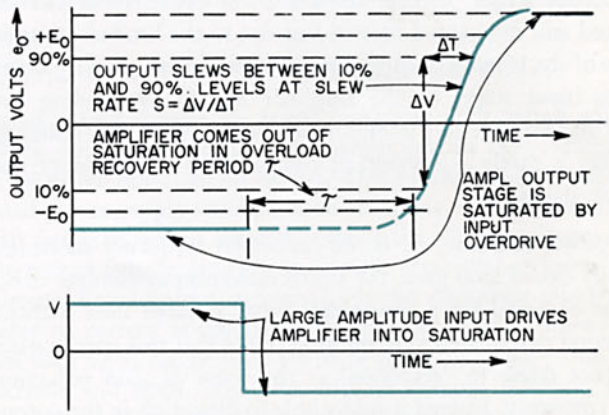

FIGURE 9. OVERLOAD RECOVERY AND SLEW RATE ILLUSTRATION

INITIAL OFFSET VOLTAGE

Offset voltage, e_{os}, is defined as the voltage required at the input from a zero source impedance to zero the output, at any temperature, supply voltage and time (see figure 1). Initial offset voltage, E_{os}, defines the offset voltage at 25°C and rated supply voltages. In most amplifiers, provisions are made to adjust initial offset to zero with an external trim potentiometer. Some amplifiers are internally trimmed to guarantee some maximum limit on initial offset (usually ±1mV) which means that in certain applications the external trim pot can be eliminated. On special order any amplifier from Analog Devices can be internally trimmed to ±1mV initial offset or less. Initial offset can be measured with the circuit of figure 11, where an appropriate fixed resistor is substituted for the external trim potentiometer. There is a warm up drift of offset voltage following the application of power supply voltage and it is recommended that you let the amplifier stabilize for at least 15 minutes before making measurements.

INITIAL BIAS CURRENT

Bias current, i_b, is defined as the current, at any temperature, supply voltage and time, required at either input from an infinite source impedance to zero the output assuming zero common mode voltage. For differential amplifiers bias current is designated by i_b^- for the negative input and by i_b^+ for the positive input. For single ended amplifiers, like chopper stabilized units, bias current refers to the current at the negative input only.

Initial bias current, I_b, is the bias current at either input measured at 25°C, rated supply voltages and zero common mode voltage. The designation (0,+) or (0,−) indicates that no internal compensation is used to reduce initial bias current so that the polarity is always known. The sign tells to which power supply voltage an external compensating resistor should be connected to zero the initial bias current. The designation (±) indicates that internal compensation has been used to reduce initial bias current and that the residual bias current can be of either polarity. In general compensating initial bias current has little effect on the bias current temperature coefficient. The circuit of figure 11 is used to measure initial bias current.

INITIAL DIFFERENCE CURRENT

Difference current*, i_d, is defined as the difference between the bias currents at each input from an infinite source required to zero the output assuming zero common mode voltage. The input circuitry of differential amplifiers is generally symmetrical so that bias current at each tends to be equal and tends to track with changes in temperature and supply voltage. Usually difference current is 3 to 5 times less than bias current at either input, assuming that initial bias current is not compensated. If the impedance as seen from each input terminal to ground is balanced then offset and drift errors are proportional to difference current rather than to bias current. In most applications, if the external impedances at each input are balanced then there is no particular advantage in using an amplifier where initial bias current is internally compensated. Initial difference current, I_d, the difference current measured at 25°C and rated supply voltage, can be measured by the circuit of figure 11.

*Previously called offset current.

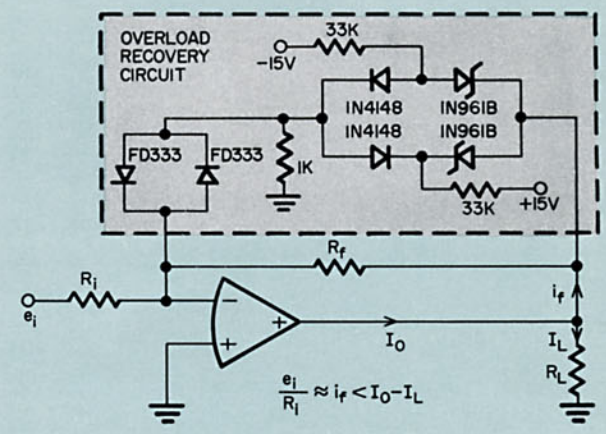

FIGURE 10. EXTERNAL CLAMP CIRCUIT FOR ±10 VOLTS

TEMPERATURE DRIFT

Offset voltage, bias current and difference current all change or "drift" from their initial values with temperature. By far this is the most important source of error in most applications. The temperature coefficients of these parameters, $\Delta e_{os}/\Delta T$, $\Delta i_b/\Delta T$ and $\Delta i_d/\Delta T$ are all defined as the average slope over a specified temperature range and are determined by subtracting the offset values at the end points of the temperature range and dividing by the temperature change. In general drift is a non-linear function of temperature and the slopes are greater at the extremes of temperature than around normal room ambient. The temperature drift coefficients are measured by the circuit of figure 11. The amplifier is used to boost its own low level input offset signal to a conveniently measurable voltage at the output. Gain is established by the ratio of R_f/R_i. The current sampling resistors, R_s, must be selected so that voltage drift is small compared to the drift due to difference current; that is $R_s \times \Delta i_d/\Delta T >> \Delta e_{os}/\Delta T$. Alternatively, voltage drift must be subtracted from the data for current drift.

One problem in using published voltage drift specifications is that this data applies only to static temperature conditions where the temperature of the module is assumed to be uniform. Voltage offset of most differential amplifiers is quite sensitive to thermal gradients, since drift performance depends on the cancellation of large offset in each transistor of the input differential pair. Therefore in environments where thermal gradients are present voltage offset may exceed that predictable from the drift coefficients. In this case where low drift over a narrow temperature range is critical, it is good practice to insulate or shield the amplifier to assure a uniform temperature. Bias current is not noticeably affected by thermal gradients and difference current, while affected, is far less sensitive to gradients than voltage offset.

Bias current and difference current for FET and varactor bridge amplifiers double each 10°C and therefore a linearized drift coefficient has little meaning except over a narrow operating temperature range.

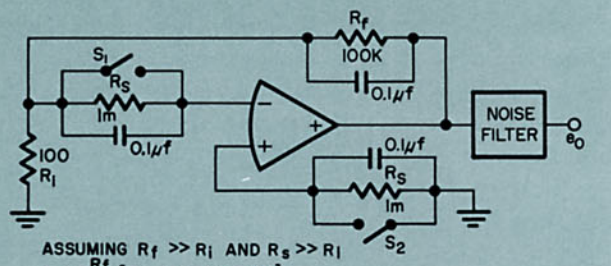

ASSUMING $R_f >> R_i$ AND $R_s >> R_i$

$$e_o = -\frac{R_f}{R_i}\left[e_{os} \pm R_s(i_b^- - i_b^+)\right]$$

$$i_d = i_b^- - i_b^+$$

Parameter	Switch Position S1	S2	Output Voltage
e_{os}	Closed	Closed	$e_o = -(\frac{R_f}{R_i})e_{os}$
i_b^-	Open	Closed	$e_o = -(\frac{R_f}{R_i})R_s i_b^-$
i_b^+	Closed	Open	$e_o = -(\frac{R_f}{R_i})R_s i_b^+$
i_d	Open	Open	$e_o = -(\frac{R_f}{R_i})R_s i_d$

FIGURE 11. TEST CIRCUIT FOR OFFSET VOLTAGE, BIAS CURRENT AND DIFFERENCE CURRENT

SUPPLY VOLTAGE SENSITIVITY

Offset voltage, bias current and difference current will also change when supply voltage is varied. Usually errors due to this effect are negligible compared to temperature drift. Static or DC supply voltage coefficients, $\Delta e_{os}/\Delta V_s$, $\Delta i_b/\Delta V_s$, $\Delta i_d/\Delta V_s$ are measured with the circuit in figure 11 by varying supply voltages individually by ± 1 volt.

There is a common misconception that tracking power supplies whose plus and minus voltages change by the same amounts will improve supply voltage coupling. In general tracking supplies are of no benefit since the positive supply voltage coefficient is usually much larger than the negative supply voltage coefficient. Rejection of AC noise and ripple on the power supplies is not as good as static or DC rejection, but for almost all amplifiers AC rejection will be better than 1mV/V or 60dB over a wide range of frequencies.

DRIFT VS TIME

Offset voltage, bias current and difference current change with time as components age. Static data over long time periods is difficult to obtain because of the inherent time delays involved. But it is safe to say that the published time drift for amplifiers does not accumulate linearly. For example, voltage drift for a chopper stabilized amplifier (which by the way is by far the best amplifier type for long term stability) is usually quoted as 1μV/day whereas cumulative drift over 30 days will usually not exceed 5μV nor 15μV in a year.

Long term voltage drift in differential input type amplifiers depends primarily on the aging of collector resistors in the input differential pair. The aging coefficient referred to the input is about 300μV/% change of collector resistance. It is not unlikely that carbon composition resistors will age by 1 or 2% over a year resulting in an offset voltage change of 300 to 600μV. The use of metal film resistors for the collector resistors will greatly improve long term stability to the point where base to emitter voltage aging is the determining factor. With metal film resistors, offset voltage for transistor amplifiers is about 100μV/year while FET amplifiers will age somewhat more.

Long term bias current stability in differential input amplifiers again depends on resistor stability when internal initial current compensation is employed. In this case, multi-megohm carbon composition resistors are used (since large value metal film resistors are not available) to supply about 90% of the base bias current. If these resistors change by 1%, the specified initial bias current will change by about 9% which can be a substantial drift. Therefore one can conclude that amplifiers without internal initial current compensation will exhibit more stable bias current. Under these conditions long term bias current stability depends primarily on the stability of the transistor or FET devices which may be better than 1%.

INPUT IMPEDANCE

Differential input impedance, R_d, is defined as the impedance between the two input terminals, measured at 25°C, assuming that the error voltage, e_ε, is nulled or very near zero volts (see figure 1). For a single ended amplifier, R_d, is the input impedance since the plus input is grounded. To a first approximation, dynamic impedance can be represented by a capacitor, C_d, in parallel with R_d.

Differential input impedance is among the most difficult parameters to measure particularly for a high gain, high impedance type amplifier. In general this measurement can only be made under laboratory conditions by an experienced engineer with special fixtures to shield against noise pick up. For this reason most companies including Analog Devices rarely measure this parameter on a production line basis. Fortunately a precise knowledge of R_d is not required, since for most circuits, so long as R_d is large compared to the external feedback impedance, its value has little bearing on closed loop performance.

The circuits of figure 12 show in principle how R_d can be measured with enough attention to reducing noise. These circuits actually measure R_d in parallel with the negative input common mode impedance. However, common mode impedance is usually 10 to 100 times greater than R_d so that the error is negligible.

Common mode impedance, R_{cm}, is defined as the impedance between each input and ground or power supply common and is specified at 25°C. (See figure 1.) For most circuits common mode impedance on the negative input, R_{cm}^-, has little significance except for the capacitance which it adds to the summing junction. However, common mode impedance on the plus input, R_{cm}^+, sets the upper limit on closed loop input impedance for the non-inverting configuration. Dynamic impedance can be represented by a capacitor, C_{cm}, in parallel with R_{cm} which usually runs from 5 to 25 pf on the plus input.

The circuit of figure 13 can be used to measure R_{cm}^+ up to about 500M ohms. Use an oscillator frequency of 1 to 5Hz

and adjust R_s for 10% reduction at the output. Then $R_{cm}+=9R_s$. Above this impedance it is advisable to substitute a picoameter for the resistor R_s and to measure DC bias current as a function of common mode voltage.

Common mode impedance is a non-linear function of both temperature and common mode voltage. For FET amplifiers common mode impedance is reduced by a factor of two for each 10°C temperature rise.

As a function of common mode voltage, R_{cm} is defined as average impedance for a common mode voltage change from zero to $\pm E_{cm}$, that is, maximum common mode voltage. Incremental R_{cm} about some large common mode voltage may be considerably less than the specified average R_{cm}, especially for FET input amplifiers.

MAXIMUM VOLTAGE BETWEEN INPUTS

Under most operating conditions, feedback maintains the error voltage, e_ε, between inputs very near to zero volts. However, in some applications, such as voltage comparators, or where the input voltage exceeds the level required to saturate the output, the voltage between inputs can become large. E_d defines the maximum voltage which can be applied between inputs without causing permanent damage to the amplifier. Placing parallel back to back diodes across the input terminals is one way to provide added protection for the amplifier.

MAXIMUM COMMON MODE VOLTAGE

For differential input amplifiers, the voltage at both inputs can be raised above ground potential. Common mode voltage, e_{cm}, is defined as the voltage above ground at each input when both inputs are at the same voltage. E_{cm} is defined as the maximum peak common mode voltage at the input before clipping or excessive non-linearity is seen at the output. E_{cm} establishes the maximum input voltage for the voltage follower connection. (See figure 7.)

E_{cm} is measured with the circuit of figure 7 by increasing the peak input voltage (sinusoidal waveform) until distortion is seen on the scope (about 1 to 3%). The input signal frequency must be well below the full power response frequency, f_p, for the non-inverting input.

COMMON MODE REJECTION

An ideal operational amplifier responds only to the difference voltage between inputs ($e^+ - e^-$) and produces no output for a common mode voltage — that is when both inputs are at the same potential. However, due to slightly different gains between the plus and minus inputs, common mode input voltages are not entirely substracted at the output. If we refer the output common mode error voltage to the input (dividing by gain) and call this the input common mode error voltage, $e_{\varepsilon_{cm}}$, then common mode rejection (CMR) is defined as the ratio of common mode voltage to common mode error voltage. That is $CMR = e_{cm}/e_{\varepsilon_{cm}}$. CMR is sometimes expressed in dB in which case you take 20 times the log (base 10) of the ratio. Errors due to common mode rejection can be represented in the equivalent circuit of figure 1 by a voltage generator, $e_{\varepsilon_{cm}}$, in series with the input. Note that common mode error goes to zero when either input is grounded. Therefore the inverting configuration does not exhibit a common mode error since the plus input is grounded. Thus CMR is only a problem in the non-inverting and differential configurations where common mode voltage varies in direct proportion to the input signal. In this case $e_{\varepsilon_{cm}}$ is a basic measuring error which affects the overall circuit accuracy.

For example, if a 10 volt signal, e_i, were applied to the input of the circuit in Figure 14 common mode voltage, e_{cm}, is equal to the input voltage, e_i. This would cause a common mode voltage, $e_{\varepsilon_{cm}}$, of 2mV for an amplifier with 5,000 or 74dB CMR and thus a 0.02% measuring error.

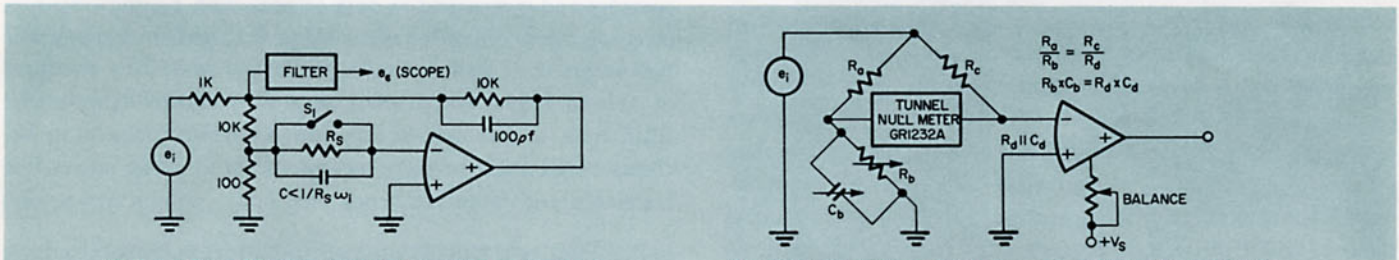

FIGURE 12. DIFFERENTIAL IMPEDANCE TEST CIRCUITS

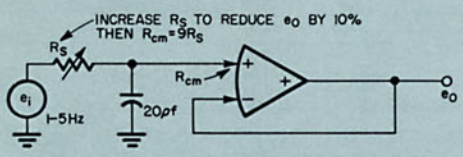

FIGURE 13. COMMON MODE IMPEDANCE TEST CIRCUIT

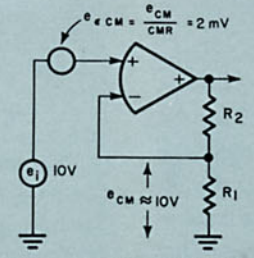

FIGURE 14. ILLUSTRATION OF COMMON MODE VOLTAGE

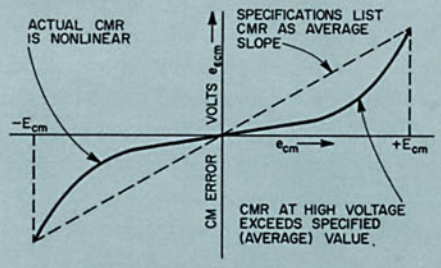

FIGURE 15. CM ERROR VS CM VOLTAGE

Precisely specifying CMR is complicated by the fact that common voltage error, $e_{\varepsilon_{cm}}$, can be a highly non-linear function of common mode voltage and it also varies with temperature. This is particularly true for FET input amplifiers. As illustrated by figure 15, CMR published by Analog Devices are average figures assuming an end point measurement at maximum common mode voltage, $\pm E_{cm}$. But the incremental CMR about some large common mode voltage may be less than the average CMR which is specified. In fact, if common mode error were a linear function of common mode voltage and if CMR were not strongly influenced by temperature then this source of error would be of little consequence. This follows since a linear CMR error can be viewed as a gain error which could be compensated for by adjusting the closed loop gain. Therefore linearity of common mode error, $e_{\varepsilon_{cm}}$, vs common mode voltage is actually more important for many applications than CMR itself.

The circuit in figure 16 provides a unique method to instrument CMR measurements as well as to measure the non-linearity of common mode errors. The oscilloscope display will duplicate the pattern of figure 15. A floated power supply allows a single ended oscilloscope to be used and almost any regulated power supply has floated outputs with sufficient isolation. Published CMR specifications apply only to DC input signals so that this measurement should be made with a signal frequency of 5Hz or less. CMR at higher frequencies, although not guaranteed by the specifications, can also be measured with this circuit. It is further assumed that the external circuit impedances of both the test circuit and the application are small compared to the common mode impedance to avoid additional common mode errors due to impedance unbalance.

INPUT NOISE

Input voltage and current noise characteristics can be in principle measured, specified and analyzed very much like offset voltage and bias current characteristics. In fact, offset voltage and bias current drift can be considered noise which occurs at very low frequencies. For this purpose in both the equivalent circuit of figure 1 and the test circuit of figure 11, replace e_{os} by e_n, an equivalent voltage noise generator, and replace i_b^- and i_b^+ by i_N^- and i_N^+, equivalent current noise generators. The primary difference in measuring and specifying noise as opposed to DC drift is that bandwidth must be considered. At low frequencies, 100Hz or less, 1/f noise prevails which means that the noise per root cycle increases inversely with frequency. At the mid band frequencies noise per root cycle is constant or "white."

To measure noise a sharp cut off bandpass filter is added to the output of the circuit of figure 11. Furthermore the impedance, gain and capacitors must be adjusted to assure that neither the amplifier nor the external feedback components limit the noise bandwidth of the measurement. For very low current noise, it becomes very difficult to make wideband measurements because of the interaction of stray capacitance and the large sampling resistor values needed to boost sensitivity.

NEW MODEL 141 A/B/C

LOWEST COST FET OP AMPS NOW AVAILABLE — $25.

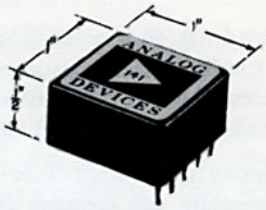

Now you can buy an FET op amp at a price you can afford. Bias current, the pivotal spec for FET's, is actually superior to competitive amplifiers costing 2 or 3 times as much. Three versions of the 141 offer improved voltage drift and bias current at increasing cost which allows you to buy no more than you need for a given application. Trade offs in the design which make possible the low selling price are modest performance with regard to common mode rejection, common mode voltage range and supply voltage rejection.

SPECIFICATIONS

Open Loop Gain, min.	20,000
Rated Output	±10V @ 2 ma.
Unity Gain Bandwidth	3 MHz
Full Power Response, min.	50 kHz
Slewing Rate, min.	3V/μ sec.
Input Impedance	10^{11} ohms
Comm. Mode Voltage, min.	±7V
Comm. Mode Rejection	1000
Supply Voltage Rejection	150μV/°%

	A	B	C
Bias Current, max.	50 pA	25 pA	25 pA
Voltage Drift, max.	75μV/°C	40μV/°C	25μV/°C
Price (1-9)	$25.00	$30.00	$35.00

Usually two noise measurements are taken. Low frequency noise in a bandpass of .01 to 1Hz is measured on a strip chart recorder and is specified as peak to peak with a 3σ uncertainty, meaning that 99% of the observed peak to peak exclusions will fall within the specified limits. Wideband noise in a bandpass of 5Hz to 50kHz is measured on a VTVM, preferably a true RMS type, and is specified as rms. Of course, shielding becomes very critical in these measurements to avoid power line frequency and radio frequency pick up.

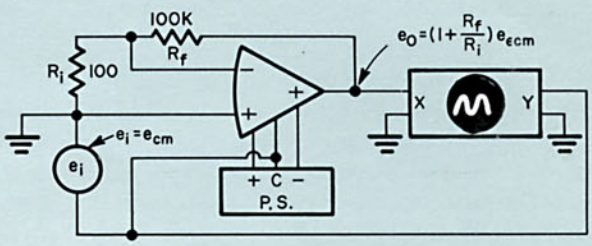

FIGURE 16. CMR TEST CIRCUIT

New Varactor Bridge Op-Amps Models 302, 303—Cost $110 Each Feature 0.01 pA Current Noise and 0.05 pA/°C Current Drift

If you measure picoamps, work with multi-megohm sources, handle transducer output swings from picoamps to milliamps without range switching, or need better integrator and differentiator accuracy or day-long time constants, Models 302 or 303 will probably solve your problem. These two varactor bridge units out perform electrometer tubes and FET's, and can upgrade circuit accuracy and sensitivity at reduced cost.

THE VARACTOR BRIDGE technique* has been long neglected as a practical means for instrumenting analog circuits and in particular operational amplifiers. As compared to chopper stabilized and differential amplifiers, very little design or application information has appeared in technical publications on varactor bridge amplifiers. In addition the price of presently available units, including our own Model 301, is reasonably high. For these reasons, most engineers regard the varactor bridge amplifier as a scientific curiosity . . . good for someone else's application, but certainly not for his own.

Analog Devices has launched a campaign to establish varactor bridge operational amplifiers as practical, low cost building blocks for everyday circuit problems which involve high impedances, low input current or wide dynamic range requirements. Spearheading the campaign are two new varactor bridge units, Models 302/303, priced below $100 in moderate quantities and featuring 0.01pA noise and 0.05pA/°C drift at 25°C.

The varactor bridge amplifier goes a step beyond the performance of FET amplifiers and offers a solid state alternative to electrometer vacuum tubes. We shall discuss here the performance of Models 302 and 303 and how it compares in various applications to other amplifier types.

BACKGROUND

Analog Devices introduced the Model 301 Varactor Bridge Operational Amplifier in June, 1966 and since that time we have gained a great deal of insight into the applications for this type of amplifier. This experience showed that the primary objection to the 301 was its high price and that a low cost varactor bridge amplifier was needed to serve as a routine problem solver in everyday circuits.

The problem we faced was reducing prices without sacrificing circuit performance. Guided by our application experience, we were able to trim certain less pivotal specs, such as bandwidth, DC voltage gain, output rating, voltage noise, and yet compromise circuit performance in only minor ways. More important, the new amplifier design actually has fourfold better bias current and drift performance than the original Model 301.

*See page 13 for operating principles.

The first step in re-designing for reduced cost was to split the bulk of high impedance low level circuits between two different models, one (Model 302) optimized for inverting applications and the other (Model 303) designed specifically for non-inverting configurations. Thus, instead of building one expensive "universal" amplifier like the Model 301 which operates inverting, non-inverting or differential, we can now offer two specialized units that involve a simpler circuit and reduced testing during manufacture.

Bandwidth was the first specification for review. Our application experience showed that most Model 301 amplifiers were used strictly as DC amplifiers, perhaps because wide bandwidth picoamp sources are few and far between owing to the omnipresence of capacitance strays that slug output response.

Consequently, trimming bandwidth from 500kHz to 20kHz paves the way for a whole domino effect of all round amplifier economizing.

The next parameter for consideration was output rating. It turns out that varactor bridge amplifiers are rarely used to "activate things" directly. As a rule, the amplifier's output signal feeds an instrument preamplifier or other cascaded circuitry that draws only microamp signals. Accordingly, the output rating of ±10V, 20mA for the Model 301 was reduced to ±10V, 2mA for the Models 302/303.

A further logical specification for cost trimming is open-loop DC voltage gain. Most voltage amplifier circuits based on Model 301 were used for impedance transformation, and operated with closed loop gain at or near unity. Therefore, a 10,000 DC gain provides abundant loop gain in most voltage amplifier circuits. In any event, a booster amplifier capable of raising total gain to 10 million or so can be added for about $10 extra.

None of the foregoing performance changes would have been significant by themselves. But taken altogether, along with the separation of applications between inverting and non-inverting models, the cumulative cost savings have reduced price below $100 in OEM quantities.

Since key specifications are simultaneously improved (bias current and drift specs raised fourfold, Model 303's Z_{cm} raised from 10^{12} to 10^{13}), many present users will be able to upgrade equipment performance while reducing cost. Also, many newcomers will now find it economical to use Model 302 or 303 to overcome the inherent limitations of FET or electrometer tubes amplifiers. The table below compares specifications for Models 301, 302 and 303.

SPECIFICATIONS	MODELS* 301	302	303
Bias Current, 25°C, max.	2pA	.5pA	.5pA
Bias Current Drift 25°C, max.	.2pA/°C	.05pA/°C	.05pA/°C
Current Noise DC to 1Hz, p-p	.01pA	.01pA	.01pA
Voltage Noise DC to 1Hz, p-p	1uV	2uV	2uV
Offset Voltage Drift, max.	50uV/°C	60uV/°C	60uV/°C
Input Impedance Between Inputs	10^{10}	10^{9}	10^{9}
Common Mode	10^{12}	—	10^{13}
Open Loop Gain, DC, min.	500,000	10,000	10,000
Rated Output, min.	±10V 20mA	±10V 2mA	±10V 2mA
Unity Gain Bandwidth	500kHz	20kHz	15kHz
Full Power Response, min.	5kHz	80Hz	60Hz
CMRR	10^{8}	—	10^{6}
Price (1-9)	$198	$110	$110

*Model 301 — Differential, Inverting and Noninverting
Model 302 — Inverting Model 303 — Noninverting

AMPLIFIER TYPES COMPARED

The varactor bridge amplifier, in common with all amplifiers based on parametric techniques (see "Operating Principles" and Analog Dialogue #2) is noteworthy for its very low noise levels. Particularly for 1/f noise, which plagues all DC amplifiers, the varactor bridge type has no equal among solid state devices.

The combination of low current noise (0.01pA), and low current drift (0.05pA/°C at 25°C), are the pivotal characteristics that place the varactor bridge amplifier beyond all other solid state types for circuit impedance exceeding roughly 10 megohms and for signal currents below 100pA. Electrometer tubes do offer higher input impedance and lower current drift and noise than varactor amplifiers. However, their low frequency voltage noise is about 100 times greater than the 302 and 303 and electrometer tubes are notorious for voltage offset aging — as much as 2mV/hour. In addition electrometer tubes are subject to microphonic noise and they suffer recovery times of hours or days following an input overdrive. Electrometer tubes are not as reliable as a solid state varactor bridge and replacing them usually involves some tricky adjustments in matched input pairs.

Since noise and drift determine final measuring accuracy, we've compared the noise and drift performance for Model 302 varactor bridge amplifier against three other types, and plotted the results for a current to voltage amplifier against increasing circuit sensitivity (R_F). The graphs, Figure 1, are drawn for varactor bridge, chopper stabilized, FET input, and transistor differential amplifiers, and show the errors due to noise and drift as functions of the current-to-voltage converter's feedback resistance R_F.

The total output noise error voltage consists of a current and voltage noise component, where the voltage error due to current noise is dependent upon the value of the feedback resistor, R_F, while the voltage component is constant. Likewise the voltage error due to drift is composed of a variable and constant component and the total voltage error due to drift is plotted for various values of feedback resistance. The effect of the feedback resistance and the constant and variable components is clearly seen in the graph. Where the curves are constant, (lower values of R_F) the current drift and current noise add negligible error, but at higher resistance values they take on major proportions as seen by the slope of the curves. Remember that the graph relating total voltage drift for the F.E.T. and Varactor Bridge applies to the temperature range from 25 to 35°C; the effect of current drift at higher temperature increases doubling each 10°C.

ACCURACY

Circuit accuracy for a given sensitivity is determined by summing the output noise and drift errors, then calculating an imaginary input current that would produce these errors if applied to the amplifier's input terminal. Accuracy then becomes the ratio between the equivalent error current input and the true current signal applied to the input terminal.

COMPARING VARACTOR BRIDGE AMPLIFIER WITH CHOPPER-STABILIZED, FET, AND TRANSISTOR DIFFERENTIAL TYPES

Curves demonstrate relative importance of drift and noise for current-to-voltage converter as function of feedback resistance, hence sensitivity. Left hand graph displays current and voltage noise referred to output in microvolts. Right hand graph plots output current and voltage drift error in microvolts/°C. Total drift error for 25°C-35°C interval is product of working temperature range and drift rate.

Noise and drift add to give total output error for selected amplifier. Dividing this error by the feedback resistance yields equivalent error current input. Circuit accuracy depends upon ratio between error current input and signal being measured.

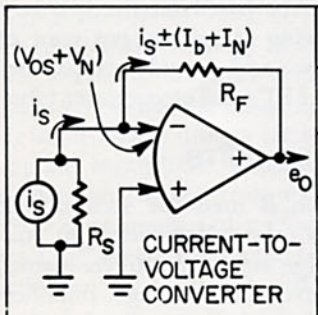

ERROR SOURCE	OUTPUT ERROR
Current Noise I_N	$R_F \times I_N$
Voltage Noise V_N	V_N
Current Drift dI_b/dT	$R_F \times dI_b/dT$
Voltage Drift dV_{OS}/dT	dV_{OS}/dT

$$e_O = -R_F\left[i_S \pm \left(\frac{V_N}{R_F} + I_N\right) \pm \left(\frac{V_{OS}}{R_F} + I_b\right)\right]$$

SIGNAL NOISE DRIFT

PARAMETER	VARACTOR BRIDGE	CHOPPER STABILIZED	FET INPUT	TRANSISTOR DIFFERENTIAL
Current Drift 25°C-35°C	0.05pA/°C (AVG.)	1pA/°C (MAX. AVG.)	1.5pA/°C (AVG.)	100pA/°C (MAX. AVG.)
Current Noise DC-1Hz	0.01pA	10 pA	0.1pA	5 pA
Voltage Drift	60μV/°C	0.5μV/°C	2μV/°C	0.75μV/°C
Voltage Noise DC-1Hz	2 μV	5 μV	3 μV	1 μV
PRICE	$110	$157	$135	$110

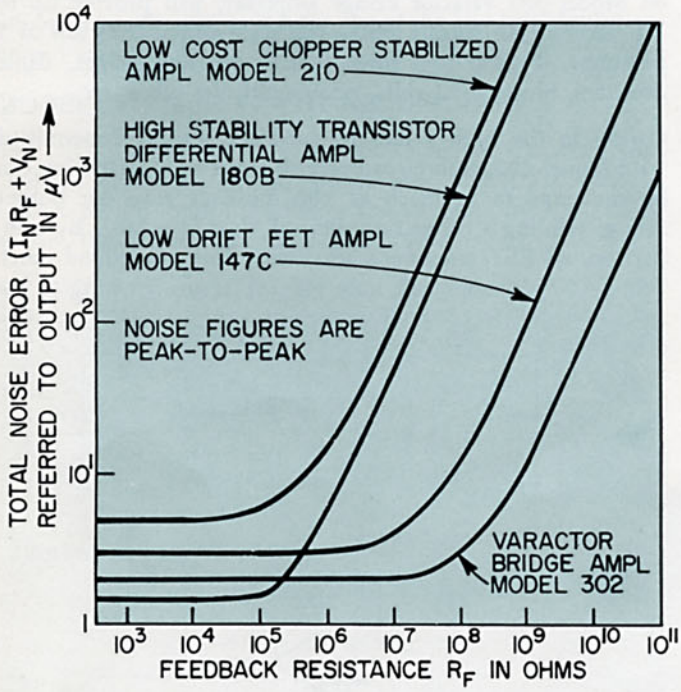

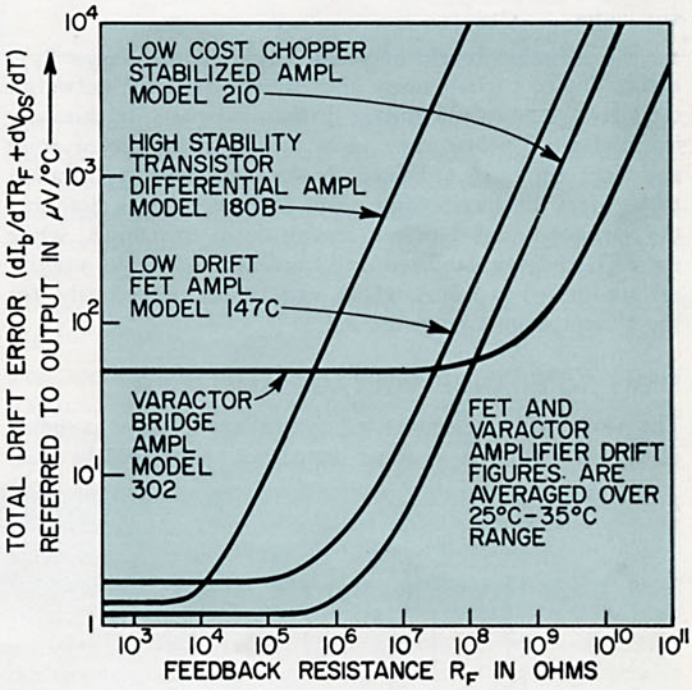

FIGURE 1. AMPLIFIER TYPES COMPARED

The equivalent input error signal is calculated by dividing the sum of the equivalent noise and drift components of output error by the feedback resistance value at the selected sensitivity. The Model 302, for example, develops 1000μV noise and 5000μV/°C drift error for a 10^{11} ohm feedback resistance. If the working temperature is a 10°C range from 25°C to 35°C, the total output drift error is 10 x 5000μV/°C, or 50,000μV. Thus the noise-plus-drift total is 51,000μV and the equivalent current error is 0.51 pA. The current error is found by dividing the total noise-plus-drift voltage error of 51,000μV by the 10^{11} ohm feedback resistor. Such a circuit, working over the specified 10°C temperature range, would then develop 10% error when handling signals of 5.1 picoamps. Likewise, a 1% error is developed for a signal current of 51 picoamps and 0.1% for 510 picoamps.

If, instead of the 10°C range, the amplifier works over a 1°C temperature interval, the drift curves give *total* offsets, rather than drift rate in μV/°C. For example, the drift error for the FET amplifier with a 10^8 ohm feedback resistor and 1°C range is 150μV, while its output noise error is 13μV. The sum of the output errors is 163μV, leading to an equivalent error current input of $163 \times 10^{-6} \times 10^{-8} = 1.63$pA. The error current input for the varactor bridge amplifier with 10^8 ohms feedback is $58 \times 10^{-6} \times 10^{-8} = 0.58$ picoamps. Thus, for circuit resistance values of 10^8 ohms and above, the varactor bridge amplifier is definitely superior to the FET type. Even for lower resistance values, but for higher ambient temperatures, the varactor bridge unit still comes out ahead.

For a temperature controlled environment or for short term minute-by-minute data where slow varying temperature drifts are not important, then noise alone determines the ultimate resolution capabilities of the amplifiers. Here the 302 excels above impedance of 100Kohms in a limited bandwidth up to a few cycles.

At the ultimate levels of sensitivity (that is, large R_F), errors due to current noise and current drift far outweigh their voltage noise and voltage drift counterparts. In this case, the equivalent error current input is simply the sum of noise and drift currents as defined in the amplifier's specification table. From the specifications given in Figure 1 it is clear that the varactor bridge unit can resolve down to 0.06pA, while the FET, chopper stabilized, and transistor differential amplifiers are limited to 1.6pA, 11pA, and 105pA, respectively, for the 1° temperature range around 25°C.

HIGH IMPEDANCE VOLTAGE AMPLIFIER

The Model 303 when connected as a voltage follower as shown in Figure 2 achieves an input impedance approximately equal to the common mode impedance (10^{13} ohms). The Model 303 is therefore intended to amplify voltage signals from very large source impedances (R_s).

The comparative data presented in the graphs of Figure 1 can also be used to predict the performance of the voltage follower circuit above. In this case, you must replace R_f in the graphs by R_s, the source impedance in Figure 2. To compute the accuracy, you combine the total noise and total drift over the temperature range of interest at a given source impedance and then compare the combined error to the signal voltage, e_s. As in the case of the Model 302 current to voltage amplifier, the Model 303 voltage follower offers better accuracy than the other amplifier types for source impedance above about 10 megohms.

APPLICATIONS

Many different circuits not explicitly recognized as inverting and non-inverting amplifiers can be based on the two new varactor bridge units. The following paragraphs put some of these applications into perspective, and provide comparisons between alternative circuits using FET's and electrometer tubes.

MODEL 302's INVERTING CIRCUITS

The basic inverting configuration is used for such diverse applications as current amplifiers (also called current to voltage converters), integrators, charge amplifiers, differentiators, and logarithmic amplifiers. Conventional voltage amplifiers may also be based on the inverting configuration, but for ultra-high impedance signal sources the non-inverting circuit based on Model 303 is actually superior to an inverting amplifier designed around Model 302.

As previously discussed, a current amplifier, Figure 3A, based on Model 302 varactor bridge amplifier, will provide up to 1% accuracy for signals whose full scale output is as low as 5 picoamps. Typical low level sources are ion gauges, flame detectors, biochemical cells, photomultiplier tubes, etc.

Owing to the high values of feedback resistance permitted with Model 302, each picoampere of input signal variation can be converted to as much as 100 millivolt amplifier output swing, yielding a conversion ratio of $V_o = I_{in} \times 10^{11}$. By comparison, an FET amplifier's sensitivity does not extend much below 100 picoamps full scale for 1% accuracy owing to the

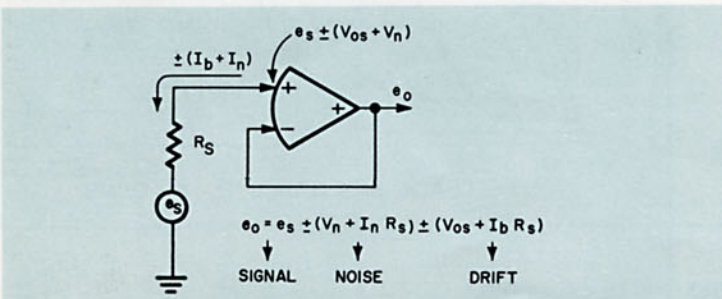

FIGURE 2. VOLTAGE FOLLOWER

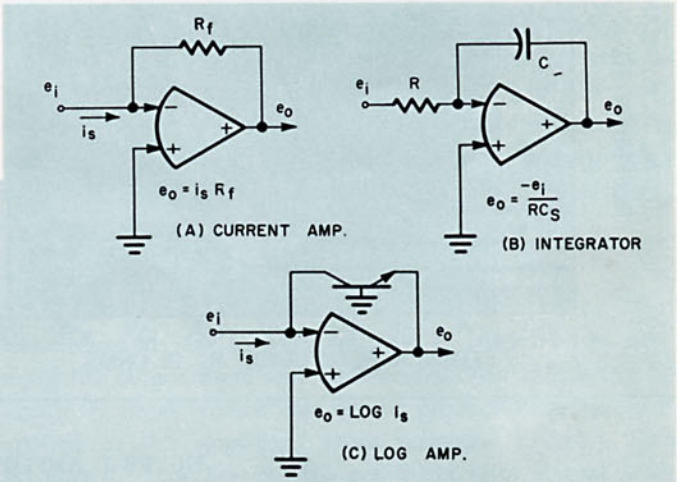

FIGURE 3. INVERTING CIRCUITS

substantially larger initial bias currents and the correspondingly high drift levels.

The advantages of Model 302 for integrator, charge amplifier and other capacitor charging circuits, Figure 3B, lies in the very long time constants that can be achieved . . . not untypically a day or more. A related advantage of Model 302 is the higher accuracy that can be achieved for shorter time constants owing to the amplifier's reduced bias current, which normally acts as a leakage current in capacitor charging applications. An even more subtle feature of the varactor bridge amplifier is the freedom it gives the circuit designer in selecting smaller capacitance values and larger resistance values for a given time constant (T=RC).

Such signal sources as photocells, flame detectors, photomultiplier tubes, sound transducers, electrochemical cells, among many others, develop an output signal that may span as many as nine decades of amplitude swing. A 10^9:1 dynamic range would ordinarily require 18 switched steps on a VTVM, yet a varactor bridge amplifier using a nonlinear feedback element can accommodate the whole signal swing with no range switching at all. When using a semiconductor feedback element with accurate logarithmic response, Figure 3C, Model 302 can handle signal swings from about 2 picoamps (2×10^{-12} amps) to the same number of milliamps (2×10^{-3} amps), representing a 10^9 = 180dB dynamic range. No solid state amplifier yet developed can equal such performance.

Differentiator circuits based on Model 302 have the basic attributes of the integrator and charge amplifier circuits, namely, very long time constants plus the ability to achieve proportionately higher accuracy with smaller capacitance and large resistance. Once more, bias current and drift are critical parameters. The varactor bridge amplifier's low noise is also important for differentiator circuits, as it is for any of the low level configurations discussed.

MODEL 303 NON-INVERTING CIRCUITS

Two well known inverting configurations are the unity gain "voltage follower" circuit, which uses 100% feedback to achieve utmost input impedance; and its gain-producing counterpart, the non-inverting voltage amplifier.

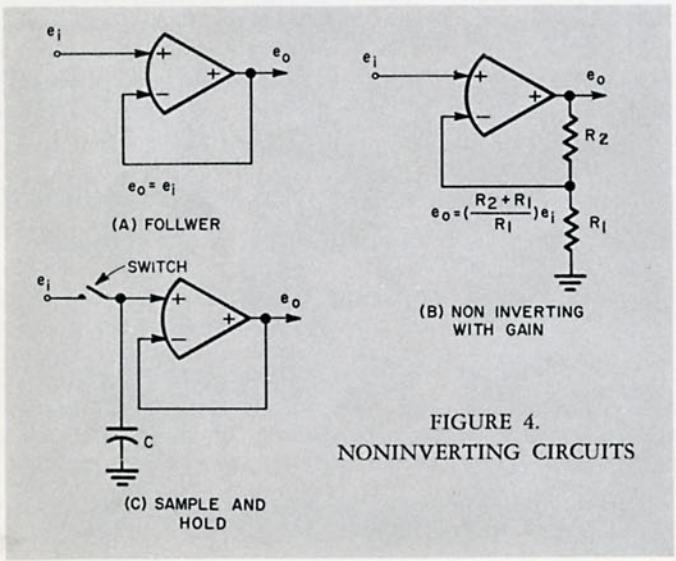

FIGURE 4.
NONINVERTING CIRCUITS

OPERATING PRINCIPLES

The circuit of the new low cost varactor bridge amplifiers, Model 302/3, is shown in Fig. 5. The amplifier's input, e_{in} alters the reactance of the voltage variable capacitors (varactor diodes), unbalances the bridge circuit, and feeds out a fraction of the excitation voltage in proportion to bridge unbalance. The bridge's 1 MHz excitation or carrier output voltage is amplified, demodulated, then fed to the final DC amplifier to raise the output level to a maximum of 10 volts. Overall voltage gain is 10,000.

Only one input terminal carries the full specification for lowest bias current and drift. This is because, for the inverting amplifier, Model 302, the positive input terminal is grounded, while for the non-inverting amplifier, the bias current is easily supplied by the output circuit. In Model 301, by contrast, both input terminals are isolated from ground for differential applications, and the unit carries a 300 volt common mode rating. However, the careful insulation of Model 303's single input terminal raises common mode input impedance to 10^{13} ohms, compared with Model 301's 10^{12} ohms.

The primary circuit difference between Models 302 and 303 is a reversal of varactor diode connections to provide either inverting or non-inverting operation from the insulated input terminal.

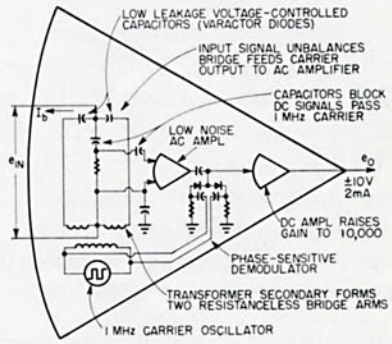

FIGURE 5.

The first of these, Figure 4A, is used as an "unloading" amplifier to reduce errors that occur when a measuring device draws its input signal from a high impedance source. The high common mode input impedance of Model 303 (10^{13} ohms) and low current drift (0.05pA/°C at 25°C), ensures maximum accuracy for sources of 10 megohms and higher, where an FET amplifier's relatively large bias current and current drift degrade accuracy.

The non-inverting amplifier, Figure 4B, combines feedback stabilized voltage gain with minimum signal source loading. An advantage of the non-inverting configuration, compared with its inverting counterpart, is the ease with which high input impedance may be obtained. The inverting amplifier's closed loop input impedance is determined almost solely by the value used for the summing resistor. By contrast, the non-inverting amplifier's closed loop input impedance is independent of the feedback values, and is set by the amplifier's inherent common mode input impedance. This difference enables accurate high impedance non-inverting amplifiers to be designed around feedback resistors selected for best stability, whereas the high value resistors needed for high impedance inverting circuits tend to be relatively drift prone. In short, inverting circuits don't make good high impedance amplifiers: non-inverting circuits are inherently superior.

A further important circuit based on the non-inverting configuration is the sample/hold amplifier, Figure 4C. Input signals are connected to this amplifier's input terminal during a "sample" interval so as to charge the storage capacitor C to the input signal level. Next, the input signal is disconnected (by a solid state or other switch), and the amplifier reverts to its "hold" operating mode. Output is then proportional to the stored voltage, enabling subsequent circuits to process the signal more or less at leisure.

A particular merit of varactor bridge amplifiers in sample/hold applications is that their low leakage current (i.e., bias current) enables *small* storage capacitors to be used without loss of accuracy. The smaller capacitors permit a shorter sampling interval, or alternatively, draw a smaller current from the source while acquiring the charge. An FET sample/hold amplifier would require a 100-fold larger capacitor for comparable accuracy.

CONCLUSION

Varactor bridge operational amplifiers offer distinct advantages over FET types in four basic circuit groups: for measuring low level currents; measuring voltage from high impedance sources; accommodating wide input signal variations using logarithmic or other nonlinear feedback; and for charging/discharging capacitors in integrator, differentiator, charge amplifier and sample/hold amplifier circuits. All of these circuits are based on either the inverting or the non-inverting configurations for which Models 302 and 303 are designed.

Compared with FET amplifiers, the varactor bridge units feature an order of magnitude better bias current and current stability performance, yield comparable input impedance values, provide distinctly better noise performance in the DC to 1Hz range, but have inferior voltage drift characteristics. The rather large voltage drift (60uV/°C) of varactor bridge types means that circuits based on these amplifiers do not outperform FET amplifier circuits until associated source impedances exceed roughly 10 megohm.

Additionally, of course, the varactor bridge amplifier is outstandingly superior to FET amplifiers for measuring currents down in the picoampere level. Even for currents in the nanoampere range the varactor bridge unit affords orders of magnitude better overall accuracy. Its superior bias current and current drift characteristics also enable the varactor bridge amplifier to outperform FET amplifiers in the logarithmic and capacitor charging groups of circuits.

Electrometer tubes outperform the varactor bridge amplifier in having higher input impedance and lower current noise and drift. However, electrometer tubes have excessive voltage noise and short term drift and also suffer the usual limitations of vacuum tube devices which includes microphonic noise, aging problems, questionable reliability and inconvenient power supply requirements.

FET stabilizes amplitude of Wien bridge oscillator

By Joseph J. Panico

Technology Division, GCA Corp., Bedford, Mass.

When the drain-source voltage, V_{DS}, of a field effect transistor approaches zero, the FET behaves very much like a linear variable resistance, and remains nearly linear at higher voltages below pinch-off. This characteristic makes FET's useful as a stabilizing element in oscillator circuits like the Wien bridge oscillator below.

In the circuit, output voltage V_o is rectified by D_1 and filtered by R_3C_1. Potentiometer R_2 sets the gate-source voltage, V_{GS}, which in turn established the output amplitude.

Oscillations occur when

$$V_{DS} = \frac{V_o'}{3}, \quad \text{where } V_o' = \frac{R_5}{R_4 + R_5}(V_o).$$

the frequency of oscillation $\omega = 1/RC$.

The circuit provides distortionless output over a frequency range of d-c to 100 kilohertz if the transistor's V_{DS} does not exceed several hundred millivolts. The drain-source resistance, R_{DS}, becomes nonlinear at greater voltages than this. However, by adding a resistor in series with the FET drain, larger amplitudes can be obtained, with low distortion and very little sacrifice in control.

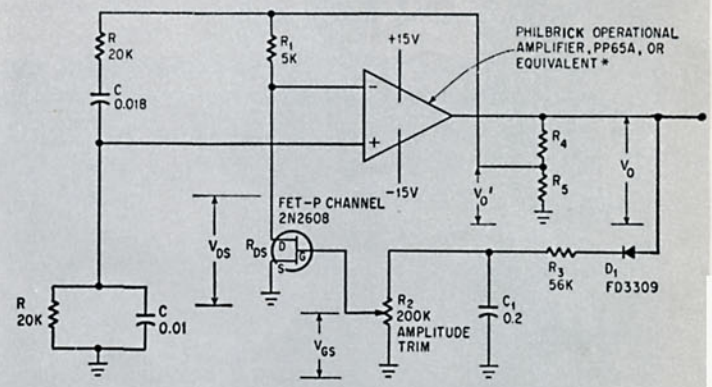

Oscillator output V_o, will be distortionless if it exceeds 10 volts, provided V_o/V_o' is greater than 10 to 1.

*Analog Devices' Model 105

Reprinted from Electronics (Oct. 3, 1966); Copyright McGraw-Hill, Inc., 1966.

Grounded-load current source uses one operational amplifier

James M. Loe,
Communications & Electronics Div., Philco-Ford Corp., Blue Bell, Pa.

A frequent need is for a current source as part of a subsystem. The classical approach to a high-quality current source is to use an operational amplifier connected as in Fig. 1a.

In this figure the load is floating. When, however, a grounded load (one side grounded) is required, two operational amplifiers are usually connected as in Fig. 1b. Here the current-sampling resistor is floating. This necessitates a differential signal pick-off amplifier with gain of 1.

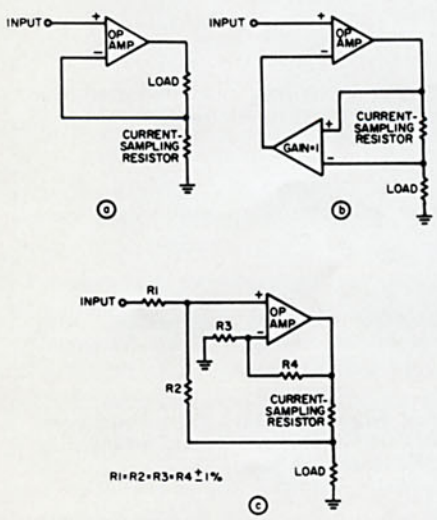

Grounded-load current source can be made with only one operational amplifier (c). In the standard circuit (a) the load floats, while (b) uses two amplifiers.

Figure 1c shows how a grounded-load current source can be obtained with just one operational amplifier. The differential input capability of the single amplifier is exploited by resistive positive and negative feedback networks. For high output impedance, network resistors *R1, R2, R3,* and *R4* must be equal to each other within ±1%.

Reprinted from Electronic Design (Aug. 2, 1967)
Copyright Hayden Publishing Co. Inc., 1967.

Measuring the Pinch-Off Voltage of FET's Conveniently

Bruce R. Smith and Irving C. Chase
Crystalonics, Inc., Cambridge, Massachusetts

Direct measurements of a FET's pinch-off voltage cannot yield accurate values to better than ±1 volt. Consequently, manufacturers had to find a parameter interrelationship accurate enough to suffice as a replacement for this important parameter.

By definition, the pinch-off voltage has been reached when an increase in the drain-to-source voltage produces little or no increase in the drain current. As seen in Figure 1, the actual point of pinch-off lies toward the end of the knee of the voltage current curve.

Further analysis of the FET's characteristic curves has shown that the gate voltage which holds the drain current to a minimum value is approximately equal to, though opposite in polarity from, the pinch-off voltage. This is analogous to the cut-off potential in a vacuum tube. Thus with this interrelationship, it is possible to find a gate voltage which is equal in value to the pinch-off voltage. The circuit in Figure 2 shows how this gate voltage can be applied and measured conveniently, where read-out on a voltmeter connected from gate to ground gives a value which matches the FET's pinch-off voltage.

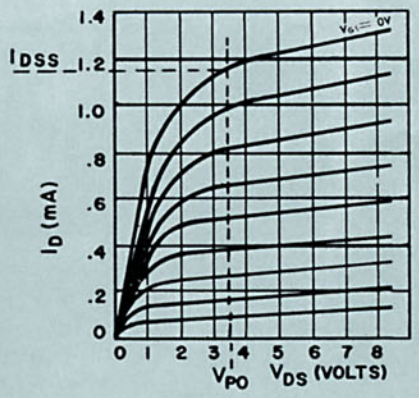

Figure 1
FET characteristic curves.

When a FET is inserted into the circuit, the drain voltage V1 approaches zero. The drain is connected to the noninverting input of the amplifier. A reference voltage V2 is connected to the inverting input of the amplifier. Since the drain is close to zero volts, the amplifier produces a negative output potential, which is applied to the gate of the FET under test, a N channel type, turning it off.

When the amplifier input voltages are balanced, there is a voltage difference V_{DD} minus V2 across the 10 MΩ drain resistor. The circuitry is designed so that voltage corresponds to the magnitude of the drain current change specified at Vpo (pinch-off voltage). In this case, with V_{DD} minus V2 equaling 1 volt, ID equals 0.1 μA.

Normally closed relay contacts are connected between the noninverting input and the output, so that the output is held to the referenced voltage (V2). A capacitor (C1) is placed across the same points to prevent latch-up by slowing the response time of the system. The devices to be measured should have a BV_{GSO} of greater than minus 15 volts. If not, the amplifier

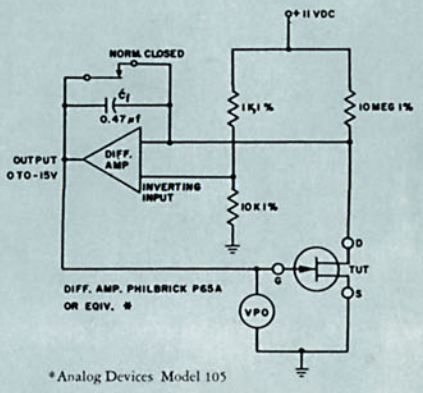

Figure 2 VPO measuring circuit.

(Continued on back page)

output should be clamped to a suitable voltage less than the minimum breakdown (as long as BV_{GSO} is greater than Vpo).

The pinch-off voltage of a P channel FET can be measured by changing the polarity of V_{DD}.

This system may be used to match FETs for differential operation (Figure 3). A match of g_m and IDSS (typically to 10 per cent) is made prior to the $\triangle$VGS measurement. The desired ID is set by the control in the gate circuit of Q1. The IR drop across Q1's drain resistor is sensed by the inverting input of the amplifier, which in turn drives Q2 until the drain voltage drops match (ID_1=IDS). Because the $\triangle$VGS match is usually with 20 - 1 mV, a minimum resolution of 500 μV is required. Subsequently, to obtain this resolution the voltmeter should be of a low level differential or nulling type.

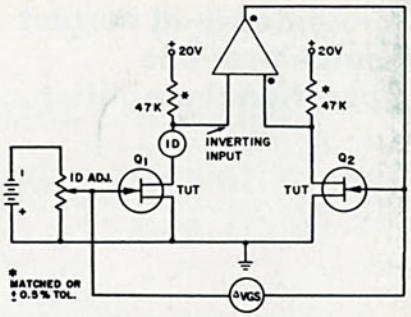

Figure 3
VGS matching for differential operation.

WORTH READING

Transconductors
Instruments & Control Systems, May, 1967
56th & Chestnut Streets • Philadelphia, Pennsylvania 19139

An excellent discussion by Erwin David, Philbrick Researchers, of transconductors showing a multitude of new applications for op amps made possible by the availability of logarithmic, quadradic, sine, cosine and arbitrary function feedback elements. Compares to digitally synthesized function generators. (6 pages)

Selecting h-f Linear D-C Amplifiers
The Electronic Engineer, April, 1967
Chilton Company
Chestnut & 56th Streets • Philadelphia, Pennsylvania 19139

A useful summary of closed loop equations for a number of common op amp configurations. (4 pages)

Linear I-Cs get larger slice of industrial control market
Product Engineering, May, 1967
McGraw Hill, Inc.
330 West 42nd Street • New York, New York 10036

An introductory article on linear I-Cs with a good comparison of specs and prices on available linear I-Cs.

Directory of IC Operational Amplifiers
Electronic Products, June, 1967
645 Stewart Avenue • Garden City, New York

Compilation of available IC op amps giving specs and prices.

Zener-Diode Function Generator
Instruments & Control System, February, 1967
56th & Chestnut Streets • Philadelphia, Pennsylvania 19139

Discusses design of non-linear transconductor using zener diode to generate arbitrary functions. (3 pages)

Working with Operational Amplifiers
Electronic Products, September, 1966
645 Stewart Avenue • Garden City, New York

Article by Carl Jackson of Nexus gives design equations and considerations for inverting and noninverting amplifier configurations. (4 pages)

Parameter Primer for Op-Amps
EDN, April, 1967
3375 South Bannock • Englewood, Colorado 80110

An article from Burr Brown which discusses the differences between the small signal and large signal frequency response of op amps, and defines such terms as slew rate, full power response and small signal bandwidth. (4 pages)

A Better Handle on Butterworth Filters
EDN, June, 1967
3375 South Bannock • Englewood, Colorado 80110

A simplified approach for deriving component values for active filters with some remarks on capacitor errors. (2 pages)

The Operational Amplifier as a Measuring Device
Electronic Instrument Digest, March, 1966
Milton S. Kiver Publications, Inc.
222 West Adams Street • Chicago, Illinois

Some interesting and useful philosophy on op amps by Daniel Sheingold of Philbrick plus a number of typical circuits for instrumentation and measurement purpose. (5 pages)

Specing IC Op-Amp Specs — Part I
EDN
3375 South Bannock • Englewood, Colorado 80110

First of a two part article, this one giving information on the significance of open loop gain specifications.

Printed in U.S.A. 9-67

Copyright 1967 by Analog Devices, Inc.